B	PART NUMBER	OL-089	REV	A	SHT	1

PROPRIETARY STATEMENT: ULTRAVOLT INC.
CONFIDENTIAL DRAWING

REVISIONS

REV	DESCRIPTION	BY	DATE	APPD
A	RELEASED TO DOC CONTROL	B.H.	5/1/2019	PM

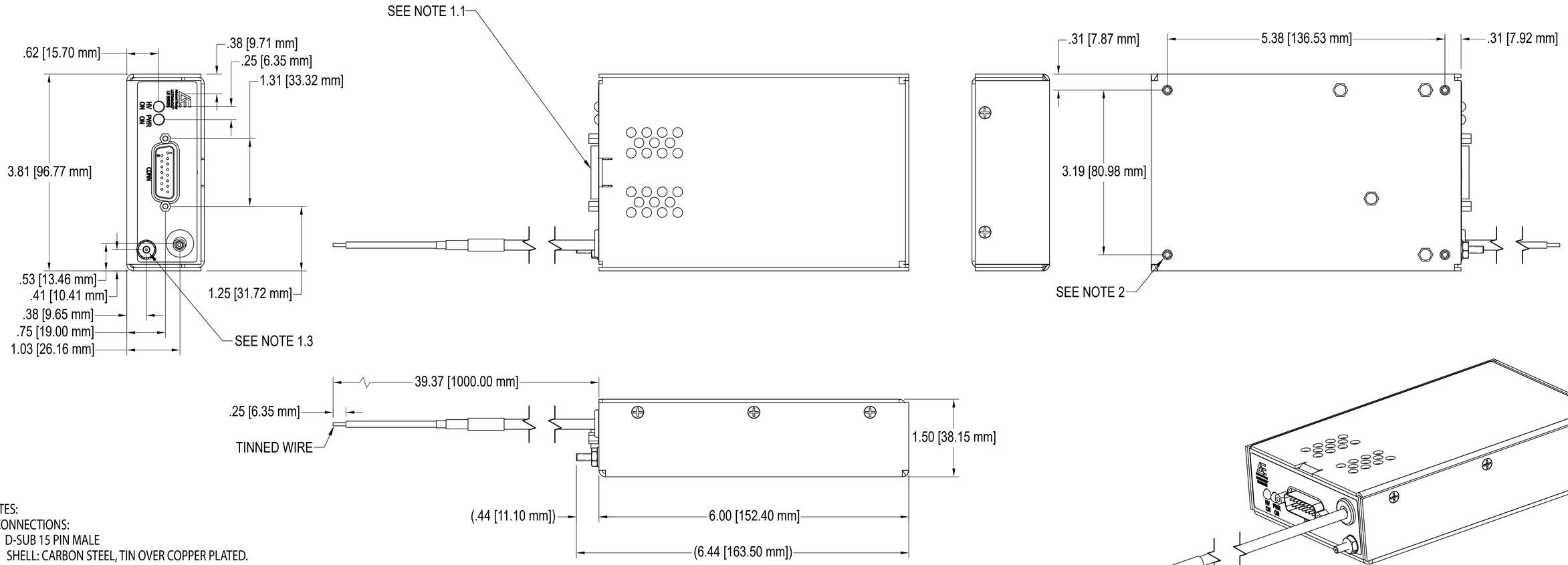

NOTES:
1- CONNECTIONS:
1.1- D-SUB 15 PIN MALE
SHELL: CARBON STEEL, TIN OVER COPPER PLATED.
INSULATOR: THERMOPLASTIC POLYESTER UL94 V-0.
CONTACTS: PHOSPHOR BRONZE.
PLATING: GOLD FLASH, NICKEL OVER TIN.
WITH 4-40 UNC-2B THREADED JACK POST.
1.2- HV OUTPUT: FLYING LEAD SHIELDED CABLE, 20KV RATED, 1METER LONG.
1.3- HV RETURN, #6-32 X 0.44 LG THD POST.
2- MOUNTING:
4X #6-32 X 0.230 DEEP THREADED.
3- CONSTRUCTION:
MATERIAL: ALUMINUM ALLOY 5052-H32.
FINISH: MIL-DTL-5541 TYPE 2 CL 1A CLEAR.
4- TOLERANCE:
4.1- OVERALL â0.030 [0.76mm].
4.2- MOUNTING HOLE LOCATION â0.025 [0.64mm].
5- UNITS ARE RoHS COMPLIANT.

DASH NUMBER	NEXT ASSY	USED ON
APPLICATION		

UNLESS OTHERWISE SPECIFIED
DIMENSION ARE IN INCHES [mm]
TOLERANCES ARE:
2 PL DEC ` .02 FRACT ` 1/64
3 PL DEC ` .010 ANGLES ` 2~

HOLE DIA	TOLERANCES
.0135 THRU .125	+.004 -.004
.126 THRU .250	+.005 -.005
.251 THRU .500	+.006 -.006
.501 THRU .750	+.008 -.008
.751 THRU 1.000	+.010 -.010
1.001 THRU 2.000	+.012 -.012

CUSTOMER		
DRAWN	jfuhrmann	DATE 7/11/2017
CHECKED	B. HOLDEN	5/2/2019
CSD	C. VORVOREANU	5/2/2019
MFG ENGR	M. COMMESSO	5/2/2019
MARKETING	D. ALLES	5/2/2019
QA	J. VESCUSO	5/2/2019
ENG	P. MATCH	5/2/2019
CFN:OL-089 revA.idw		

HVP
High Voltage Products. High Voltage Experts.

OUTLINE,
LE SERIES, 1-15KV

B	PART NUMBER: OL-089	REV A
SCALE NONE	DO NOT SCALE THIS DRAWING	SHEET 1 OF 2

B	PART NUMBER	OL-089	REV A	SHT 2

PROPRIETARY STATEMENT: ULTRAVOLT INC.
CONFIDENTIAL DRAWING

-SHV OPTION
(AVAILABLE 1-4KV)

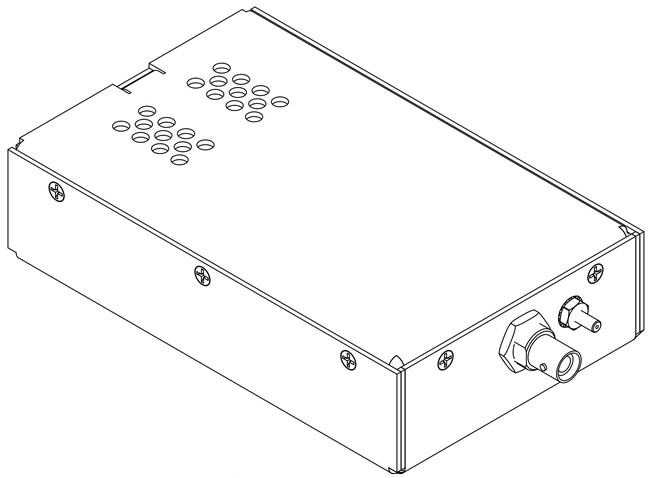

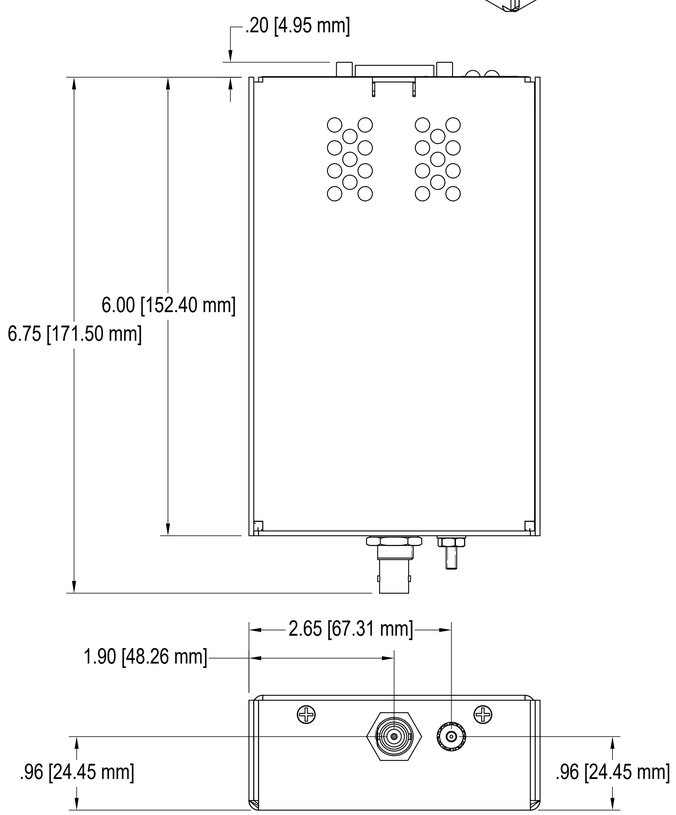

-BNC OPTION
(AVAILABLE 1-10KV)

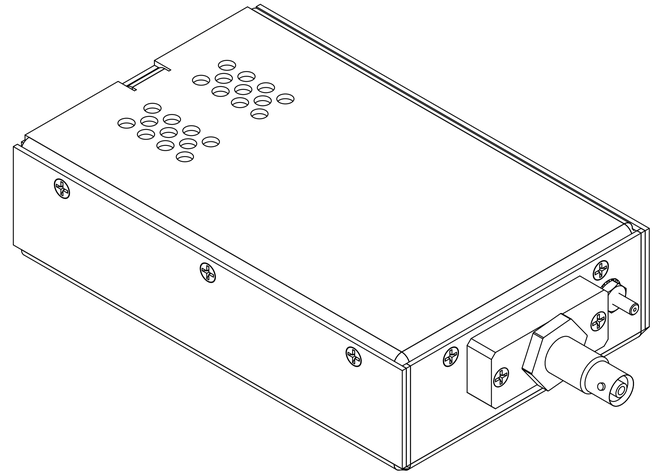

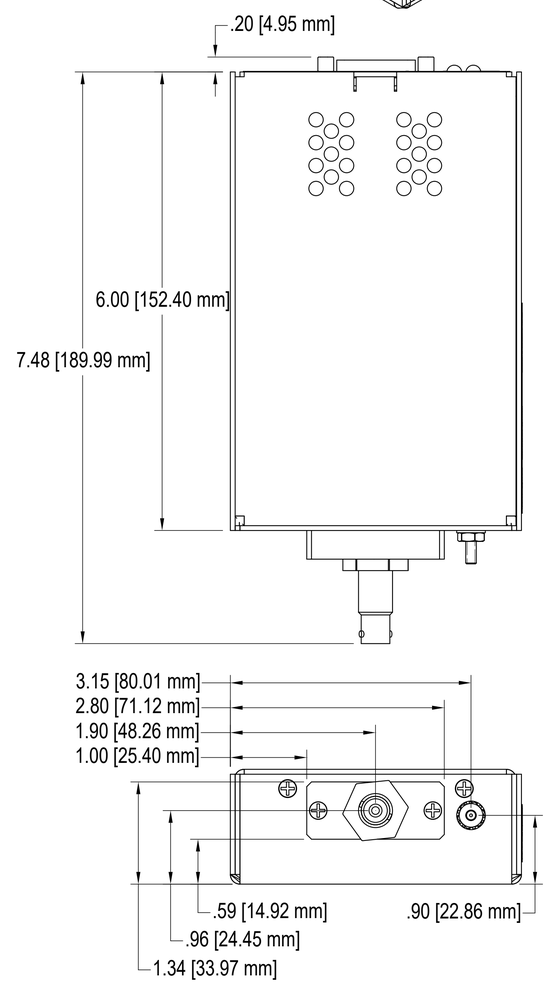

-LGH OPTION
(AVAILABLE 1-15KV)

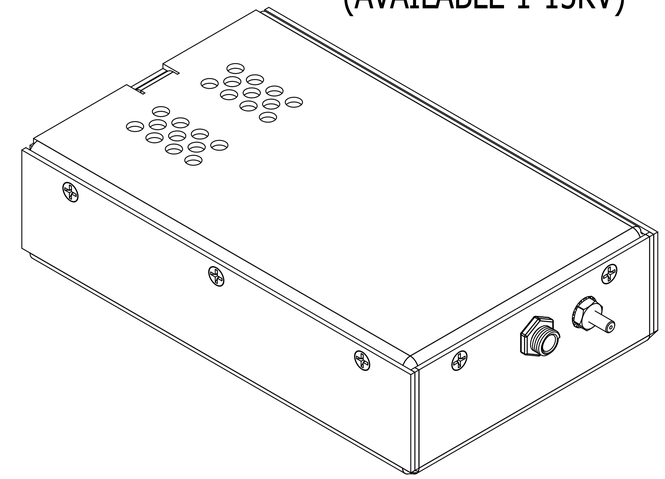

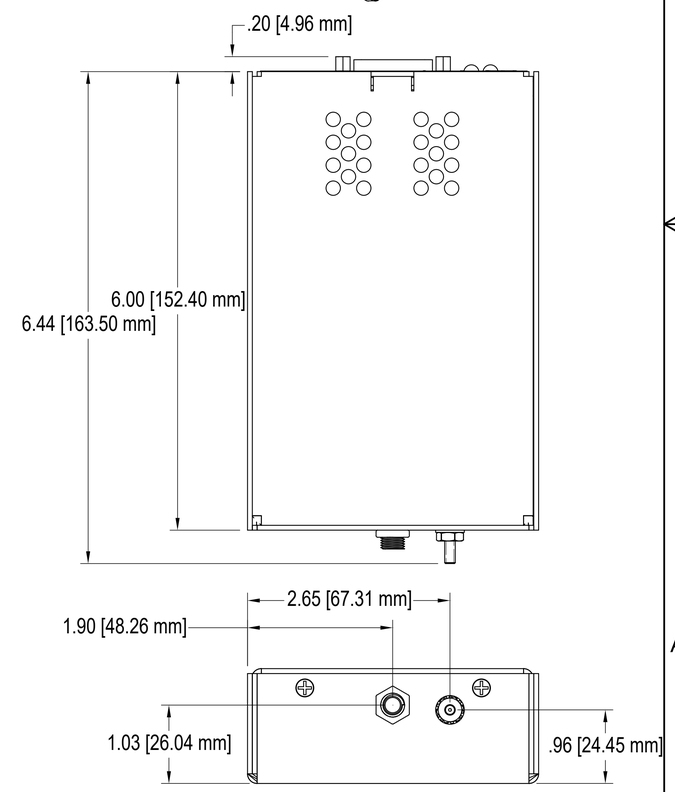

High Voltage Products. High Voltage Experts.

B	PART NUMBER: OL-089	REV A
SCALE NONE	DO NOT SCALE THIS DRAWING	SHEET 2 OF 2

CFN: OL-089 revA.idw